PONAR wadowice	**Double throttle/check valve type Z2FS10**			**WK 450 233**
	NS10	**up to 31,5 MPa**	**up to 80 dm³/min**	02.2010

APPLICATION

Throttle/check valve type **Z2FS10...** is used to control main flow rate (or pilot flow rate) in one direction of flow and to allow free flow in the opposite direction. The valve may be designed as double version (twin version - valve function is realized in two ports **A** and **B**) or single version (valve function is realized in one port **A** or **B**). The valve is applied to vertical stack mounting (sandwich plate) - generally is fitted between a subplate and a directional valve of the same nominal size and in this case is used to limit main flow rate (to control the speed of a receiver movement).

DESCRIPTION OF OPERATION

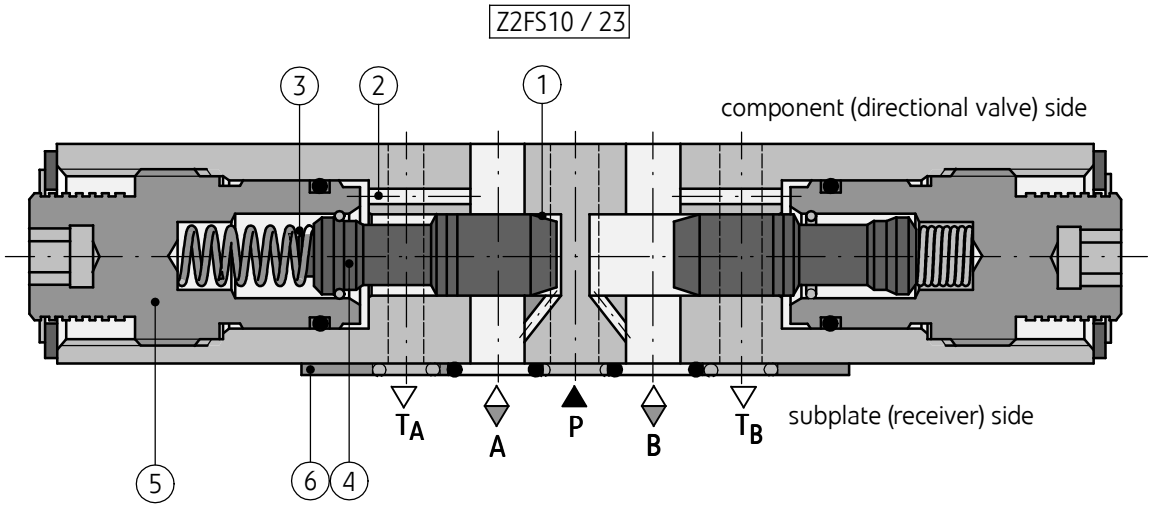

Hydraulic fluid from directional valve via port **A** (or **B**) flows to receiver through throttling slot (1). At the same time the fluid under operating pressure acts via line **A** on spring loaded side of spool (4). The spool (4) is thus hold in the throttle position by both spring and hydrostatic force. Hydraulic fluid flowing back from a receiver through port **B** (or **A**) shifts the spool (4) in the direction of adjustment and allows the fluid to flow freely (the valve operates as a check valve). Throttle rate (volume of fluid flow) can be adjusted by means of adjustment screw (5). Depending on the way the valve is fitted in relation to the seal ring plate (6), throttling effect can be achieved either in the supply of a receiver (option shown on the drawing) or drain (by rotating the valve about the cross horizontal axis by 180°).

NOTE:

For valve version with throttling effect in one port (**A** or **B**) when changing throttling effect in the supply to throttling in the drain at the same time changes the throttling location (from port **A** to **B** or from port **B** to **A**).

TECHNICAL DATA

Hydraulic fluid	mineral oil	
Required filtration	**up to 16 µm**	
Recommended filtration	up to 10 µm	
Nominal fluid viscosity	37 mm ^{2}/s at temperature 55 ^{o}C	
Viscosity range	2,8 up to 380 mm ^{2}/s	
Fluid temperature range (in a tank)	recommended	40°C up to 55°C
	max	-20°C up to +70°C
Ambient temperature range	-20°C up to +70°C	
Maximum operating pressure	**31,5 MPa**	
Cracking pressure	**0,03 MPa**	
Maximum flow	**80 dm ^{3}/ min**	
Weight	2 kg	

SCHEMES

Hydraulic schemes of valves type **Z2FS10...**

double version Z2FS10**...**	
supply throttling in ports **A** and **B**	**drain** throttling in ports **A** and **B** (valve rotated by 180°)
component (directional valve) side 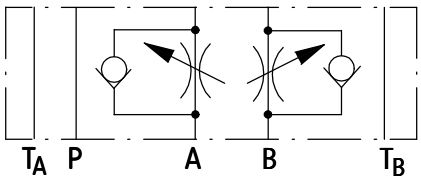 subplate (receiver) side	component (directional valve) side 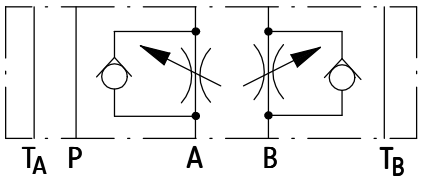 subplate (receiver) side
single version Z2FS10 **A**...	
supply throttling in port **A**	**drain** throttling in port **B** (valve rotated by 180°)
component (directional valve) side 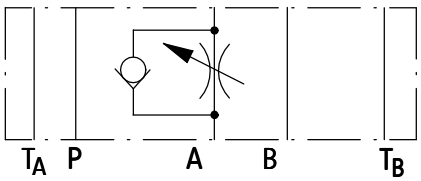 subplate (receiver) side	component (directional valve) side 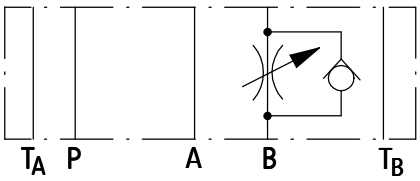 subplate (receiver) side
single version Z2FS10 **B**...	
supply throttling in port **B**	**drain** throttling in port **A** (valve rotated by 180°)
component (directional valve) side 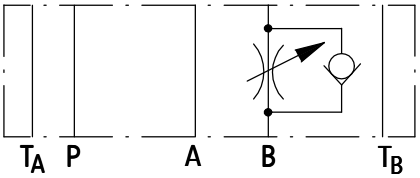 subplate (receiver) side	component (directional valve) side 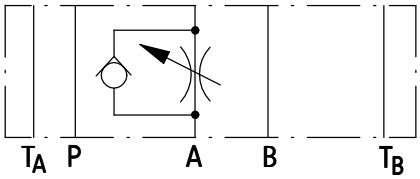 subplate (receiver) side

OVERALL AND CONNECTION DIMENSIONS

double version Z2FS10...

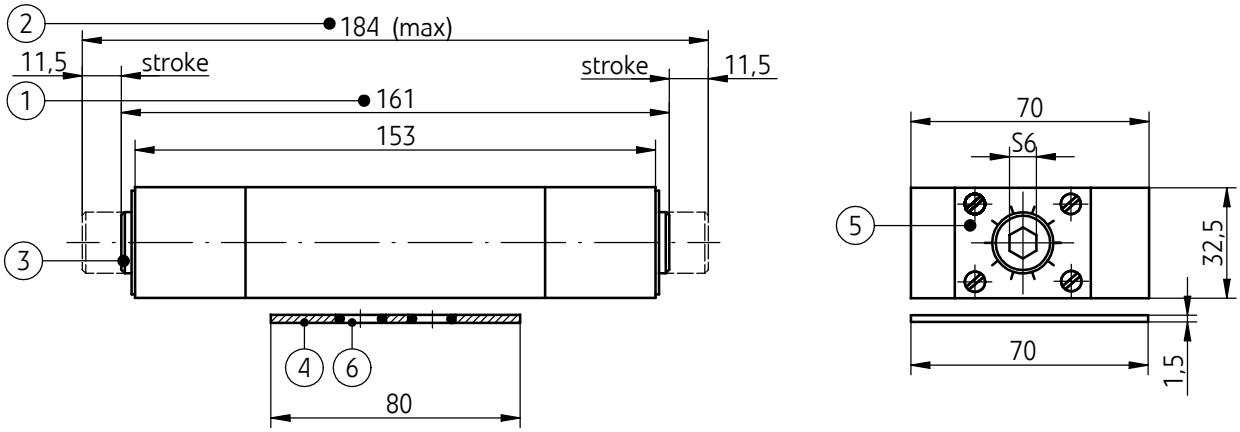

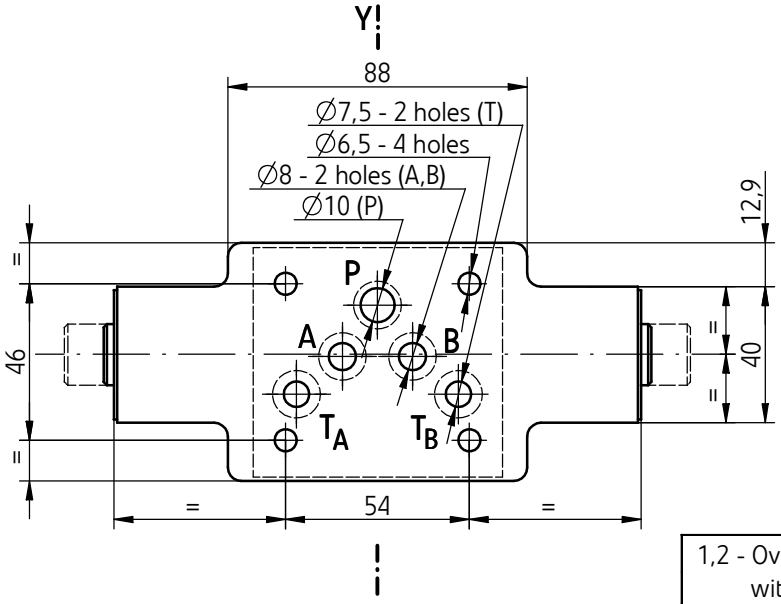

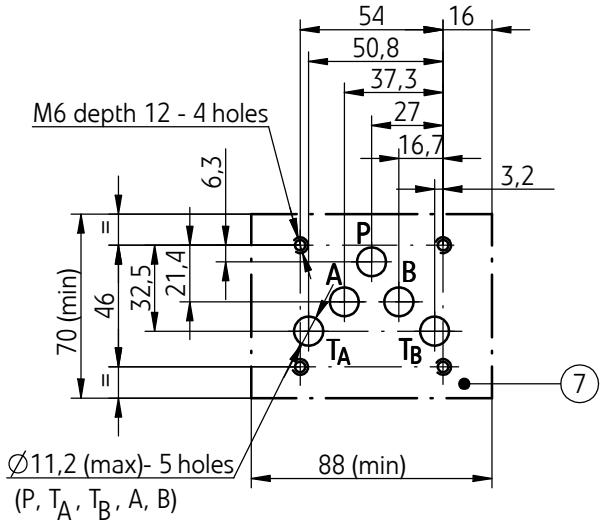

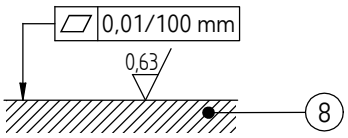

1,2 - Overall dimensions for the valve version Z2FS10**...** with throttling effect in ports **A**, **B**

3 - Adjustment screw; rotation to the right - increasing flow throttling effect; rotation to the left - decreasing flow throttling effect

4 - Seal ring plate - enables to arrange throttling effect in the supply or in the drain by changing the way in which the valve is fitted in relation to the plate - rotation the valve about the axis **Y** by 180° (see examples on page 5)

5 - Plate with adjustment scale and valve scheme

6 - Seal **o-ring 12 x 2** - 5 pcs/kit (**P**, T_A, T_B, **A**, **B**)

7 - Mounting holes configuration of a subplate in accordance with the standards listed below:

- **CETOP RP 121H** - symbol **CETOP** 4.2-4-**05** (nominal size **CETOP 05**)
- **ISO 4401** - symbol **ISO 4401-05**-04-0-94

fixing screws **M6 x L*** - **10.9** - 4 pcs/kit in accordance with **PN - EN ISO 4762** tightening torque **Md = 15 Nm**

8 - Required surface finish of a subplate

NOTE:

(*) - Required length of the screws **L** is related to type and the number of hydraulic components sandwich fitted

OVERALL AND CONNECTION DIMENSIONS

single versions: Z2FS10A...; Z2FS10B...

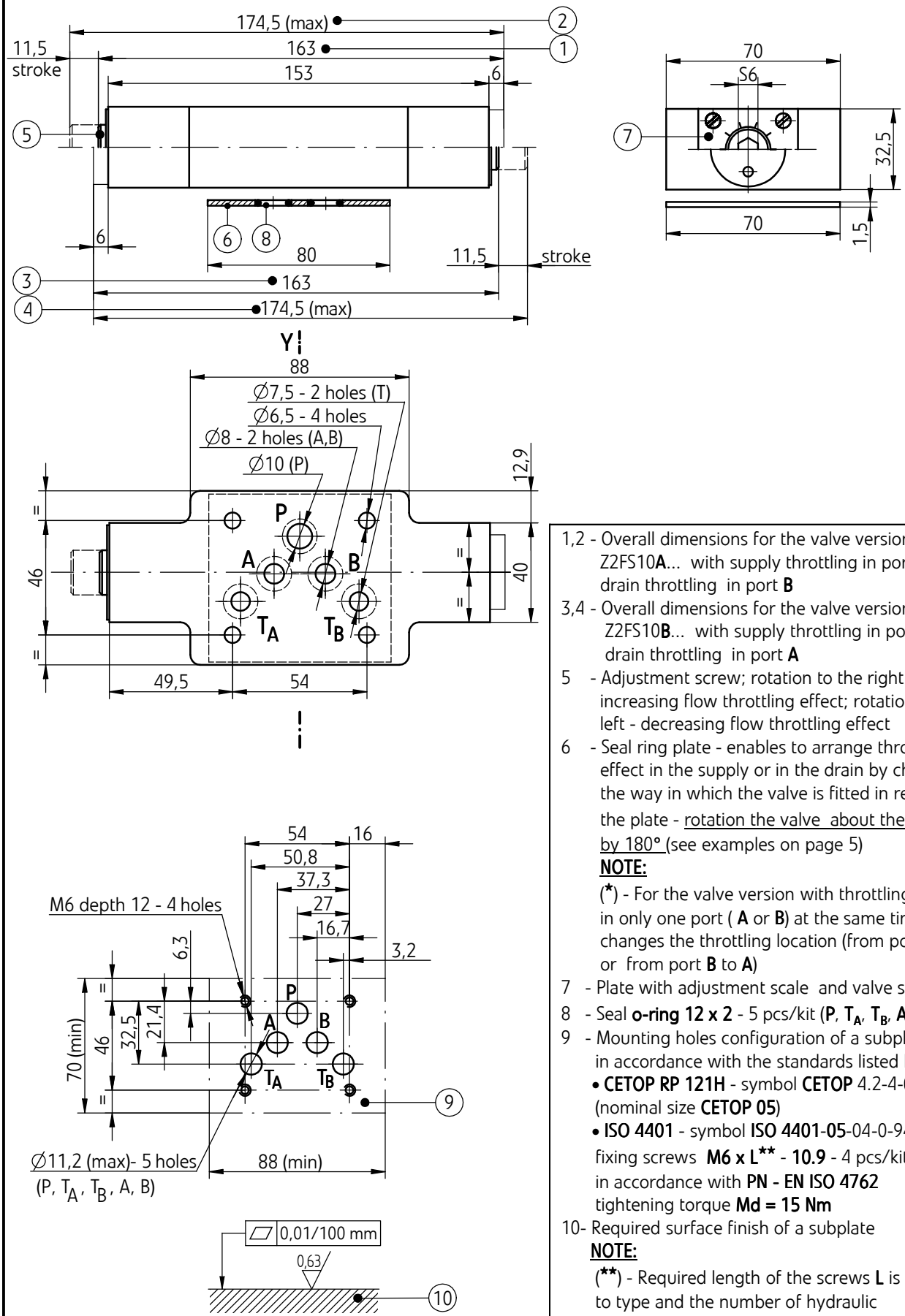

1,2 - Overall dimensions for the valve version Z2FS10**A**... with supply throttling in port **A** or drain throttling in port **B**

3,4 - Overall dimensions for the valve version Z2FS10**B**... with supply throttling in port **B** or drain throttling in port **A**

5 - Adjustment screw; rotation to the right - increasing flow throttling effect; rotation to the left - decreasing flow throttling effect

6 - Seal ring plate - enables to arrange throttling effect in the supply or in the drain by changing the way in which the valve is fitted in relation to the plate - rotation the valve about the axis **Y** * by 180° (see examples on page 5)

NOTE:

(*) - For the valve version with throttling effect in only one port (**A** or **B**) at the same time changes the throttling location (from port **A** to **B** or from port **B** to **A**)

7 - Plate with adjustment scale and valve scheme

8 - Seal **o-ring 12 x 2** - 5 pcs/kit (**P**, T_A, T_B, **A**, **B**)

9 - Mounting holes configuration of a subplate in accordance with the standards listed below:

- **CETOP RP 121H** - symbol **CETOP** 4.2-4-**05** (nominal size **CETOP 05**)
- **ISO 4401** - symbol **ISO 4401-05**-04-0-94

fixing screws **M6 x L**** - **10.9** - 4 pcs/kit in accordance with **PN - EN ISO 4762** tightening torque **Md = 15 Nm**

10- Required surface finish of a subplate

NOTE:

(**) - Required length of the screws **L** is related to type and the number of hydraulic components sandwich fitted

PERFORMANCE CURVES

measured at viscosity ν = 41 mm²/s and temperature t = 50°C

Characteristic curves Δp(Q) for the valve type Z2FS10... for various throttle settings

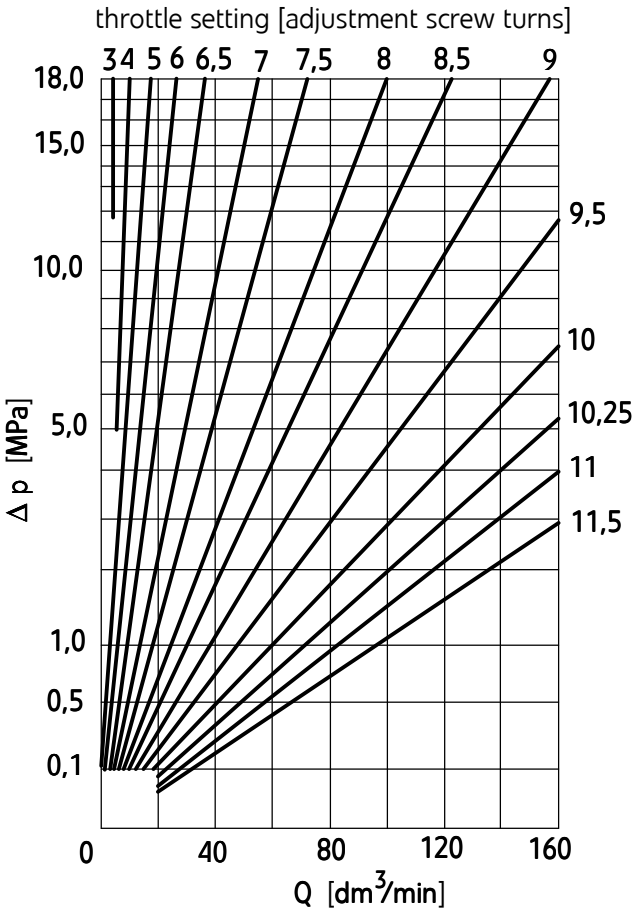

Flow resistance curves Δp(Q) for the check valve

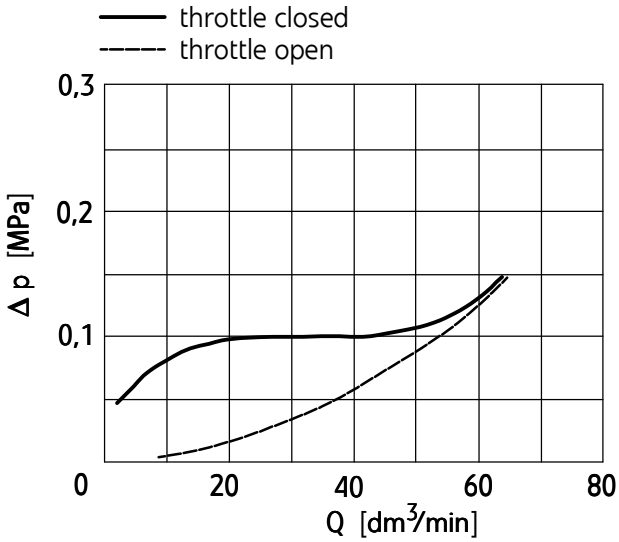

EXAMPLES OF APPLICATION IN HYDRAULIC SYSTEM

Flow throttling in the supply of the receiver (actuator)

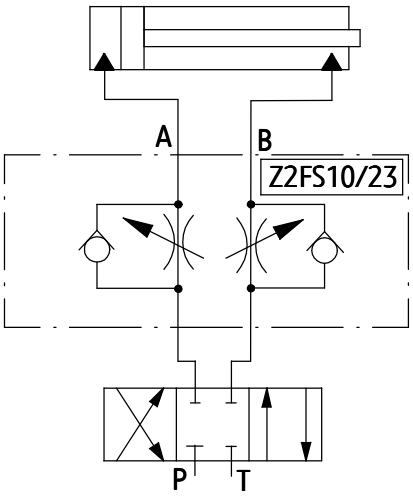

Flow throttling in the drain of the receiver (actuator) - valve fitted in rotated position by 180°

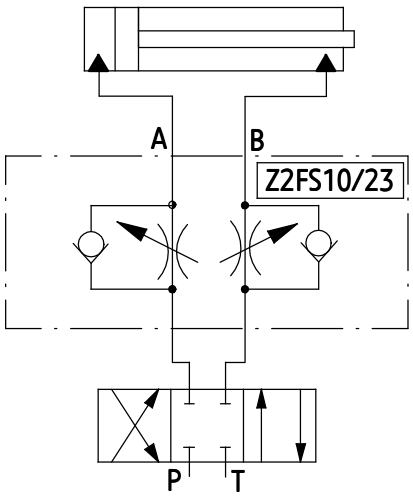

HOW TO ORDER

Z2FS	10		/		★

Nominal size (NS)
NS10 = **10**

Throttling location (hydraulic schemes on page 2)

throttle valves on the side of ports A and B = **no code**

throttle valve on the side of port A in the supply or port B in the drain = A

throttle valve on the side of port B in the supply or port A in the drain = B

Series number
(20-29) - connection and installation dimensions unchanged = 2X
series 23 = **23**

Sealing
NBR (for fluids on mineral oil base) = **no code**
FKM (for fluids on phosphate ester base) = V

Further requirements in clear text
(to be agreed with the manufacturer)

NOTES:

The throttle/check valve should be ordered according to the above coding.
The symbols in bold are the preferred versions available in short delivery time.
Coding example: Z2FS10/23

SUBPLATES AND FIXING SCREWS

Subplates must be ordered according to catalogue sheet **WK 496 520**. Subplate symbols:
G 66/01 - threaded connections G 3/8
G 67/01 - threaded connections **G 1/2**
G 89/01 - threaded connections G 1/4
G 67/02 - threaded connections M22 x 1,5

Subplates and screws fixing the throttle/check valve **M6 x L* - 10,9** - 4 pcs/kit in accordance with **PN - EN ISO 4762** must be ordered separately.
Tightening torque **Md = 15 Nm**

NOTES:
(*) - Required length of the screws **L** is related to type and the number of hydraulic components sandwich fitted.
The subplate symbol in bold is the preferred version available in short delivery time.

PONAR Wadowice S.A.
ul. Wojska Polskiego 29
34-100 Wadowice
tel. +48 33 488 21 00
fax.+48 33 488 21 03
www.ponar-wadowice.pl